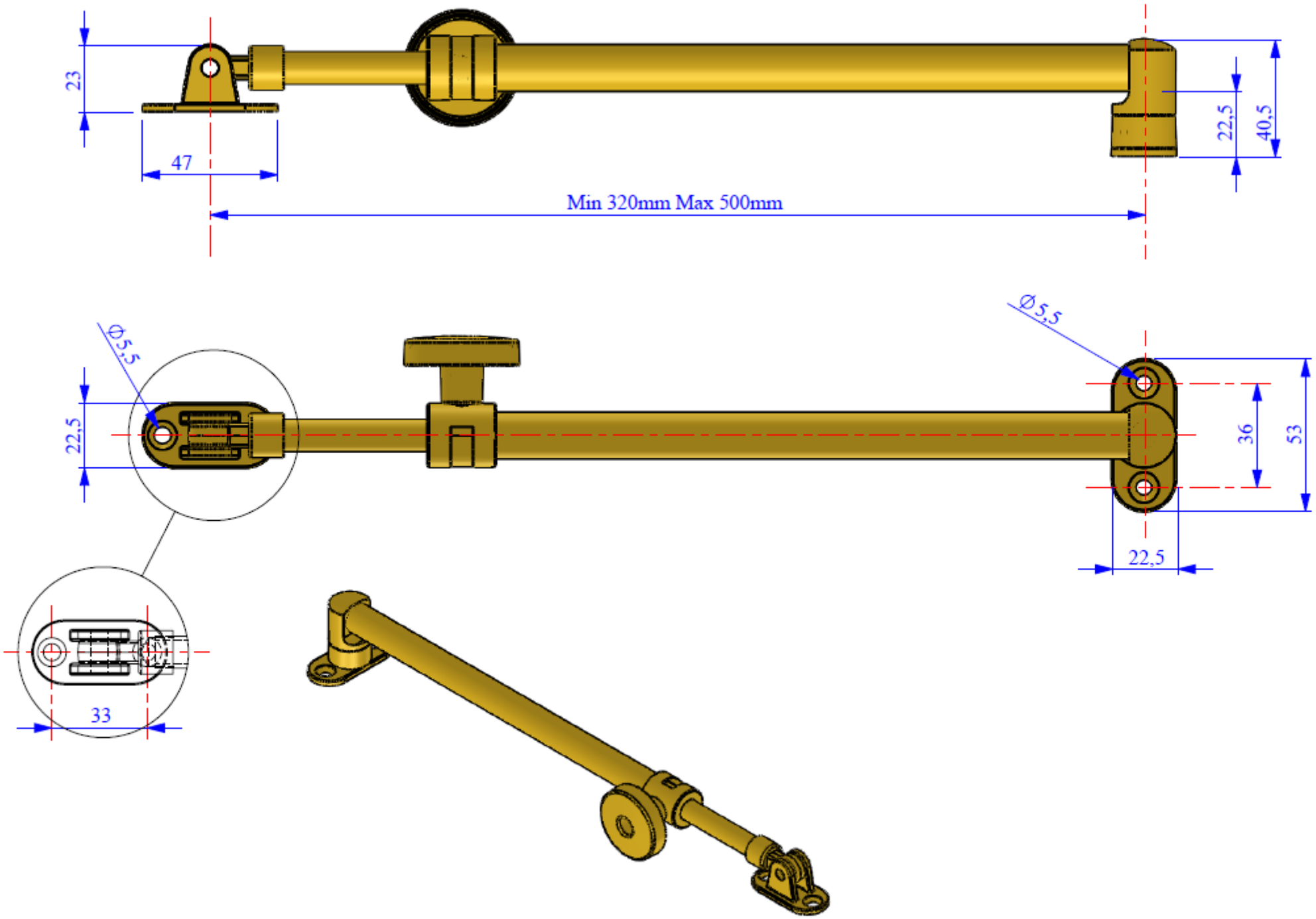38.191.40 dx