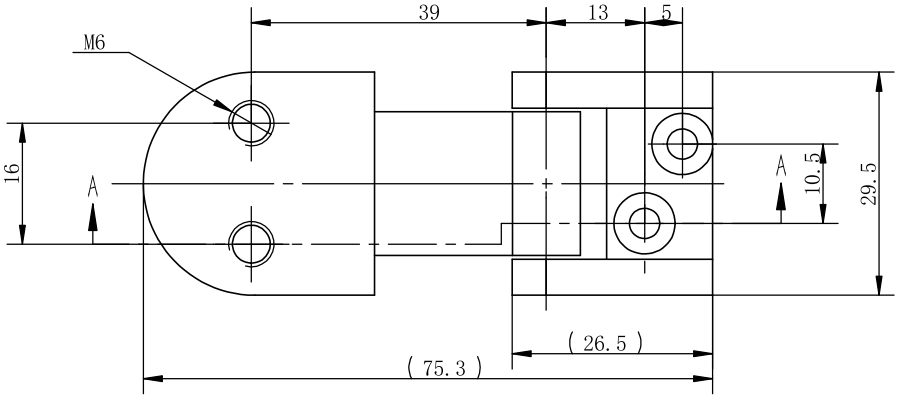
39
13
5
M6
16
A
A
10.5
29.5
(26.5)
(75.3)

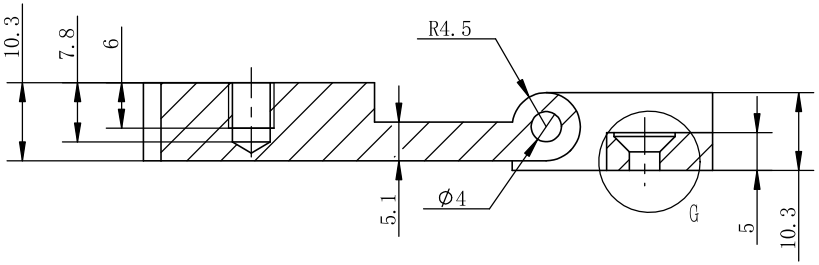
10.3
7.8
6
R4.5
5.1
Ø4
G
5
10.3

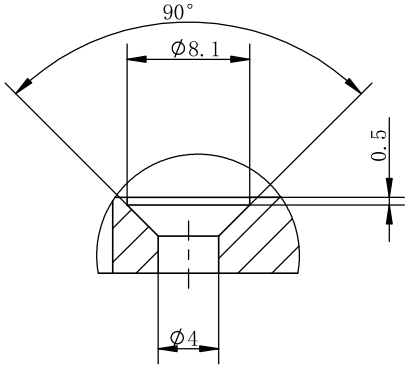
90°
Ø8.1
0.5
Ø4

						316	
							3892600