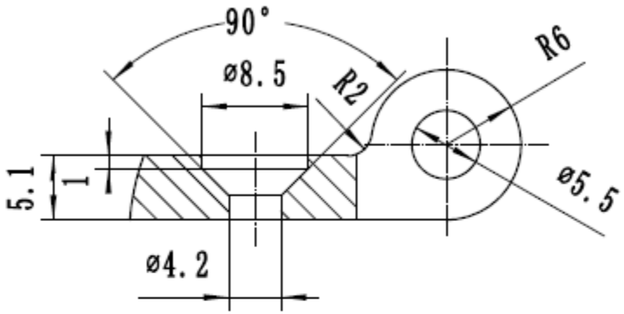
90°
ø8.5
R2
R6
5.1
1
ø5.5
ø4.2

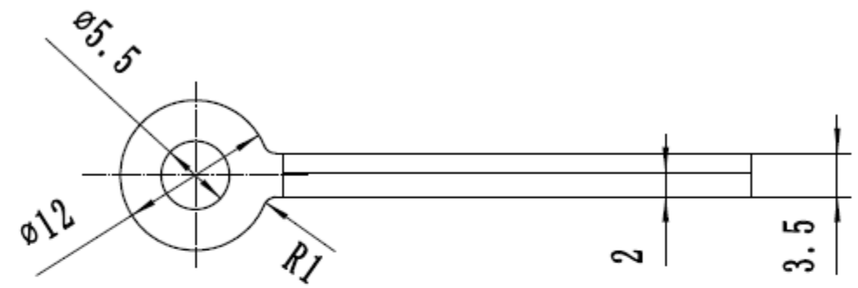
ø5.5
ø12
R1
2
3.5

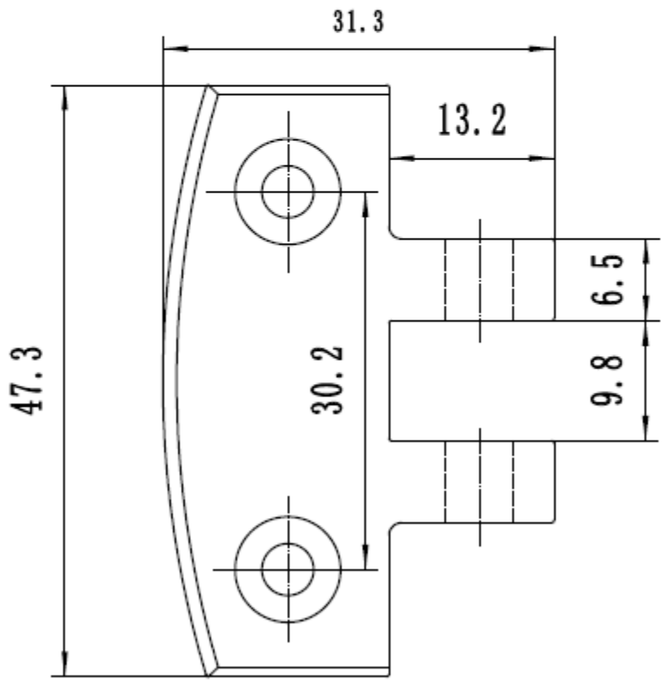
31.3
13.2
47.3
30.2
6.5
9.8

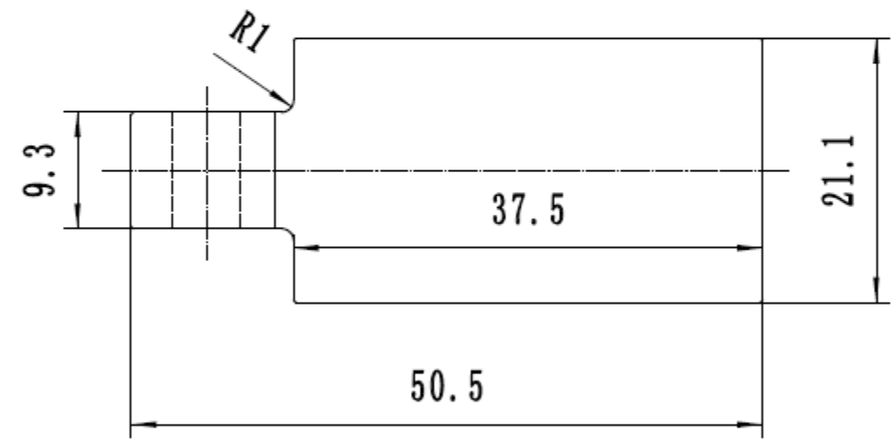
R1
9.3
37.5
21.1
50.5